Product samples
产品样本

Heating Traced Cable Type
Emergency Eyewash & Shower with Alarm
电伴热复合式洗眼器（声光报警器）

产品编号：P/N 801004ABS-S3E2B2-A

YANCHENG STG SAFETY EQIPMENT CO., LTD
盐城市斯壮格安全设备有限公司

中国《应急喷淋和洗眼设备》起草单位

中石化《石油化工紧急冲淋系统设计规范》起草单位

目 录

一、 公司介绍 Company Introductions 2

二、 产品说明 Product Descriptions.....4

三、 基本技术参数 Basic technical parameters.....5

四、 洗眼器技术标准 The standards of Emergency Eyewash & Shower 6

五、 安装手册 Installation manual 6

六、 现场调试方法 The way of commissioning in the site 7

七、 现场测试方法 The way of test in the site 7

八、 现场开车说明 Start-up in the site 8

九、 操作手册 Operation manual.....8

十、 维修手册 Maintence manual.....9

十一、 备品备件表 Spare Parts List 10

十二、 装箱单 Packing list 11

十三、 产品照片 Products Picture 12

十四、 产品图纸 Products Drawing 12

STG SAFETY EQUIPMENT CO.,LTD

一、 公司介绍 Company Introductions

GB/T 38144.1/2-2019 眼面部防护 应急喷淋和洗眼设备--------起草单位

SH/T3205 2019 石油化工紧急冲淋系统设计规范--------起草单位

全球唯一的《自闭式安全门》企业标准

With over 17th years experience in the manufacturing of Emergency Eyewash and Shower equipment, and over three year experience in the manufacturing of self closing safety gate equipment ,STG Safety Products is a highly respected leader in reliable and innovative products to protect people and provide emergency personal treatment. STG® is certified to the ISO 9001:2015 Standard, CE Standard and five patents for Emergency Eyewash & Shower. And four patents for self closing safety gate

超过17年生产制造喷淋洗眼器和3年自闭式安全门的经验，STG 品牌洗眼器被视为客户信赖和创新型保护雇员安全与提供紧急救护处理安全防护用品，公司通过ISO 9001:2015管理体系认证和产品欧洲CE安全认证，获得5项洗眼器的专利和4项自闭式安全门的专利。

INNOVATIVE HISTORY 发展历程

STG Safety Equipment Co.,Ltd., located in Dongtai city, Jiangsu Prov. PRC, started manufacturing operations in 2003. STG® developed its Emergency Eyewash and Shower products and self closing safety gate manufacturing business with a focus on solving problems for hazardous-area applications. Since our inception, STG® has designed and manufactured market-leading Emergency Eyewash and Shower equipment and self closing safety gate equipment

成立于 2003 年斯壮格（STG）安全设备有限公司位于中国江苏省盐城东台市，致力于提供雇员处于有害物质工作现场提供紧急救护的安全喷淋洗眼器，开发了用于保护雇员紧急状态下跌倒时的安全防护的自闭式安全门，在公司成立初期，斯壮格（STG）定位于设计和制造高品质的洗眼器产品和自闭式安全门产品

- In 2003 Established Guangzhou STG Safety Equipment Co.,Ltd
  2003年成立广州市斯壮格安全设备有限公司
- In 2005 Established Wuxi STG Safety Equipment Co.,Ltd
  2005年成立无锡市斯壮格安全设备有限公司
- In 2009 Established Yancheng STG Safety Equipment Co.,Ltd
  2009 年成立盐城市斯壮格安全设备有限公司

DESIGN EXCELLENCE 产品设计优势

STG® conducts intensive research and development to enhance and expand our extensive line of Emergency Eyewash and Shower products. STG's three patent certificate Eyewash and redesigned

STG SAFETY EQUIPMENT CO.,LTD

safety station system are recent examples of product innovations that demonstrate our commitment to excellence in innovation and design. By following strict, exacting standards, STG Emergency Eyewash and Shower products meet all government and industry regulations（ANSI/ISEA Z358.1 2014 and EN15154:1/2/3/4 Emergency Eyewash & shower standard）. Our markets include the chemical process, electronics, public utilities and primary metals production

STG 致力于研究与开发来提升扩大安全喷淋洗眼器的产品线，拥有4项洗眼器国家专利和1项紧急洗眼站专利展示证明STG 在设计能力方面的优势，严格遵循国家与工业在安全喷淋洗眼器方面的规定（美国洗眼器标准ANSI/ISEA Z358.1 2014和欧洲洗眼器标准EN15154:1/2/3/4），我们产品的应用市场包括石油化工、设备制造业、造纸业、实验室、制药业、电子制造业、公用事业和金属原材料制造业。

STG® conducts intensive research and development to enhance and expand our extensive line of self closing safety gate products. STG's four patent certificate self closing safety gate are recent examples of product innovations that demonstrate our commitment to excellence in innovation and design. By following strict, exacting standards, STG self closing safety gate products meet all government and industry regulations（ANSI/ISEA Z358.1 2014 and EN15154:1/2/3/4 Emergency Eyewash & shower standard）. Our markets include the chemical process, electronics, public utilities and primary metals production

STG 致力于研究与开发来提升扩大自闭式安全门的产品线，拥有 4 项自闭式安全门国家专利展示证明 STG 在设计能力方面的优势，严格遵循国家与工业在自闭式安全门方面的规定（ISO_14122-4_2016 Part3 & 4 和斯壮格企业标准 Q/STG 001-2018），我们产品的应用市场包括石油化工、设备制造业、造纸业、实验室、制药业、电子制造业、公用事业和金属原材料制造业。

1. ISO_14122-3_2016 Safety of machinery-Permanent means of access to machinery-Part 3, Stairs, stepladders and guard-rails，ISO_14122-4_2016 Safety of machinery-Permanent means of access to machinery-Part 3, Stairs, stepladders and guard-rails
2. Q/STG 001-2018

SERVICE EXCELLENCE 产品服务优势

Our knowledgeable, responsive customer service associates strive to provide on-time, error-free deliveries for every order. They are also available to answer technical questions about our product lines. STG® relies on the input of our valued customers to assist us in our goal to continually make improvements and respond to needs in the marketplace.

STG 服务团队具有设计制造和测试方面相关的知识水平，及时地为客户提供相应技术解决方案，我们依据客户的建议来提高产品的性能和改进产品性能来满足市场的需求。

RESOURCE ALLOCATION 资源配置

Factory area: 工厂占地	**Workshop area:车间面积**	**Laboratory area:实验室占地**

STG SAFETY EQUIPMENT CO.,LTD

10000 ㎡	2000 ㎡	100 ㎡	
Personnel 员工			
Personnel 员工	Professional technicians 技术工程师		
30 人	3 人		
Department 部门			
technology development center 技术设计部	producing department 产品制造部	quality inspection department 质量检测部	sales department 售后服务部
Equipment 生产设备			
Lathe 车床	Polishing 抛光	Welding 焊接	Water pressure testing machine 水压测试
Products 生产产品			
Emergency Eyewash & Shower 喷淋洗眼器	Self Closing Safety Gates 自闭式安全门	Toe Board Links (Z5) 挡脚板	
认证体系			
ISO9000:2015	CE		
Website:网站			
http://www.stgmfg.com	http://www.a1899.com	http://www.ycstg.com	http://www.eyewasher.cn.
E-mail 邮箱			
wx@stgmfg.com	wxstg@126.com	gz@stgmfg.com	

STG SAFETY EQUIPMENT CO.,LTD

二、 产品说明 Product Descriptions

Heating traced cable Emergency Eyewash &Shower uses electrical heating cable of automatic control of temperature, playing the role of insulation and anti-freeze, it is suitable for areas where the temperature is below 0℃ in winter. However, this Eyewash &Shower can't increase outlet water temperature. 电伴热复合式洗眼器采用自动控制温度的电伴热带，对洗眼器进行伴热保温，起到防冻的作用，适用于冬天出现 0 度以下的地区使用，但是，电伴热洗眼器没有办法提高洗眼器水温

Eyewash & Shower which install workshop directly equips shower system and Eye Wash system. Use showering system to wash with large quantity of water when the body or cloth of the injured is splashed by chemical substances. Use Eye Wash system to wash when the face, eyes, neck or arm of staff are splashed by chemicals. And the washing time must be more than 15 minutes. 复合式洗眼器配备喷淋系统和洗眼系统，直接安装在工作现场的地面上。当化学品物质喷溅到眼部、面部或者手臂的时候，使用洗眼系统进行大水量冲洗；当化学品物质喷溅到身体或者服装上的时候，使用喷淋系统进行大水量冲洗。使用洗眼器的冲洗时间必须大于 15 分钟

Its technical parameters meet technical requirements of GB/T 38144.1/2-2019 and SH/T 3205-2019 Emergency Eyewash & Shower standard and technical documents of STG. It is widely used in petroleum、chemical、electric power、electronics and other industries where the temperature in winter is below 0℃. 该洗眼器技术参数符合 GB/T 38144.1/2-2019 和 SH/T 3205-2019 洗眼器标准的技术规定和斯壮格公司洗眼器技术文件，广泛应用于冬天出现 0℃以下天气的石油、化工、电力、电子等等行业使用

三、 基本技术参数 Basic technical parameters

Design pressure 设计压力	Test pressure 测试压力	Water supply pressure 供水压力	Operating pressure 操作压力
1.0 MPa	1.5 MPa	0.2~0.6 MPa	0.2~0.6 MPa

Design temperature 设计温度	Suitable for ambient temperature 适用于环境温度	Operating temperature 操作温度
65℃	-40~38℃	16~38℃ （由现场保证）
Washing liquid 冲洗液体	Inlet size 进水口尺寸	Outlet size 出水口尺寸
Tap water for drinking 饮用自来水	1-1/2” RF-FLANGE	1-1/2” FNPT
Shower water flow 喷淋水流量	Eye wash/ Face wash water flow 洗眼/洗脸水流量	Eye wash water flow 洗眼水流量
＞76 L/MIN	＞11.4 L/MIN	＞1.5L/MIN
The material of shower bowl 喷淋盆材料	The material of eyewash elbow 洗眼弯头材料	The material of eyewash bowl 洗眼盆材料
SS304	SS304	SS304，φ292mm

Main material 主体材料	Using Time 使用时间
SS304	＞15 MIN
Explosive-proof grade 防爆等级:	Ingress Protection 防护等级
■Exd IIC T6 ■Exe II T6	IP66
Voltage 电压	Power 功率
■220VAC □ 230VAC □ 24VDC	■ 200W □ 8W
Alarm 声光报警器	DCS
■ 有 □ 无	□ 有 ■ 无

四、 洗眼器技术标准 The standards of Emergency Eyewash & Shower

序号	标准号	标准名称
1	GB/T 38144.1-2019	眼面部防护 应急喷淋和洗眼设备 第 1 部分：技术要求
2	GB/T 38144.2-2019	眼面部防护 应急喷淋和洗眼设备 第 2 部分：使用指南
3	SH/T3205 2019	石油化工紧急冲淋系统设计规范
4	ANSI/ISEA Z358-1 2014	美国洗眼器技术标准 Emergency Eyewash & Shower standard

五、 安装手册 Installation manual

1. Eye Wash is installed beside dangerous places. Less than 10 seconds from hazard to Eye Wash. 洗眼器安装在危险场所附近，直线达到洗眼器的时间：小于 10 秒钟
2. Installation steps 安装步骤：

安装步骤 Installation steps	安装内容 Installation contents
第一步骤 First step	According to base of the unit, drill four holes of 14mm diameter on the ground. 根据洗眼器底座安装孔位置，在需要安装洗眼器的地面钻 4 个直径 14mm 的孔
第二步骤 Second steps	Fixing eye unit with stainless steel expansion bolt 用不锈钢膨胀螺栓固定洗眼器
第三步骤 Third steps	Connect the inlet and Outlet. 连接洗眼器的进水口和出水口
第四步骤 Fourth steps	Connect the power. 连接洗眼器的电源
第五步骤 Fifth steps	Install Eye Wash bowl and Eye Wash elbow 安装洗眼盆和洗眼弯头

Remark 备注

1. Equipment the filter and maintain valve(Option object)在洗眼器进水口位置加装过滤器和维修球阀（选择配置）
2. During the storage and installation of the eye washer, the positions of the spray ball valve and the eye wash ball valve must be fully closed or fully open, otherwise it will cause the ball valve sealing gasket to expand and cannot close the ball valve 在储存和安装洗眼器的过程中，喷淋球阀和洗眼球阀的位置必须全关或者是全开的位置，不然会造成球阀密封垫片膨胀而无法关闭球阀
3. When the flushing pipe is carried out on site, the eyewash elbow must be removed, and the eyewash elbow must be installed after the completion of the flushing procedure 在现场进行冲管的时候，必须取下洗眼弯头，等待冲管程序结束之后，再安装洗眼弯头

STG SAFETY EQUIPMENT CO.,LTD

六、 现场调试方法 The way of commissioning in the site

序号	调试部分	具体内容
1	调试洗眼部分 adjust the eyewash parts	➢ 打开洗眼开关到 90° open the eyewash switch：90° ➢ 从洗眼喷头到水源最高点的距离 The distance from eyewash nozzle to the highest point of water source：150~300mm ➢ 关闭洗眼开关 Shut off the eyewash switch
2	调试喷淋部分 adjust the shower parts	➢ 打开洗眼开关到 90° open the eyewash switch：90° ➢ 再打开喷淋开关到 90°，在距离地面 1520mm 处，喷淋水直径：＞510mm，而且是满喷，同时从洗眼喷头到水源最高点的距离：＞150~300mm Then turn on the shower switch to 90 ° and at 1520 mm away from the ground, the shower water diameter is more than 510mm, and it is full spraying. At the same time, the distance from the eyewash nozzle to the highest point of water source is more than 150 ~ 300 mm
3	调试声光报警器	➢ 打开洗眼开关，声光报警器进行报警 The alarm is active when using eyewash ➢ 打开喷淋开关，声光报警器进行报警 The alarm is active when using shower ➢ 打开洗眼开关和打开喷淋开关，声光报警器进行报警号 The alarm is active when using eyewash or shower

七、 现场测试方法 The way of test in the site

序号	测试部分	具体测试内容
1	测试洗眼部分 Test the eyewash parts	➢ 打开洗眼开关到 90° open the eyewash switch：90° ➢ 从洗眼喷头到水源最高点的距离 The distance from eyewash nozzle to the highest point of water source：150~300mm ➢ 洗眼/洗脸水流量 The flow of eyewash/face:：＞11.4L/MIN
2	测试喷淋部分 Test the shower parts	➢ 打开喷淋开关到 90° Open the shower switch: 90° ➢ 在距离地面 1520mm 处，喷淋水直径：＞510mm，而且是满喷，喷淋水流量：＞76L/MIN At 1520 mm away from the ground, the shower water diameter is more than 510 mm, and the shower water flow is more than 76L/MIN
3	测试喷淋部分和洗眼部	➢ 不关闭洗眼部分 Do not close the eyewash part

	分 Test the shower parts and eyewash parts	➢ 打开喷淋开关到 Turn on the shower switch to 90° ➢ 在距离地面 1520mm 处，喷淋水直径：＞510mm，而且是满喷 At 1520 mm away from the ground, the spray water diameter is more than 510 mm ➢ 从洗眼喷头到水源最高点的距离 Distance from eyewash nozzle to the highest point of water source：150~300mm ➢ 洗眼/洗脸水流量 Eye wash / face wash water flow：＞11.4L/MIN ➢ 喷淋水流量 shower water flow：＞76L/MIN
4	测试声光报警器	➢ 打开洗眼开关，声光报警器进行报警 The alarm is active when using eyewash , ➢ 打开喷淋开关，声光报警器进行报警 The alarm is active when using shower, ➢ 打开洗眼开关和打开喷淋开关，声光报警器进行报警 The alarm is active when using eyewash or shower,

八、 现场开车说明 Start-up in the site

序号	开车部分	具体内容
1	确保供水管道打开 Make sure the water supply pipe is open	打开洗眼器进水口维修阀门 Open the maintain valve of inlet
2	打开洗眼部分 Open the eyewash parts	满足测试技术要求 Meet the test technical requirements
3	打开喷淋部分 Open the shower parts	满足测试技术要求 Meet the test technical requirements
4	同时打开喷淋部分和洗眼部分 Open the shower part and eye wash part at the same time	满足测试技术要求 Meet the test technical requirements

九、 操作手册 Operation manual

序号 Item	受伤部位 Injured part	操作部分 Operation parts	操作内容 Operation contents
1	眼部和面部 Eyes and face	单独使用洗眼部分 Use eye wash alone	➢ Push the eye wash handle by hand, open the eye wash ball valve to 90 °quickly, and the eye wash water will spray out automatically 手推洗眼手推柄，快速打开洗眼球阀到 90°，洗眼水自动喷出 ➢ after use, close the eye wash handle, so as to

			close the eye wash ball valve switch, and then reset the dust cover to the eye wash nozzle 使用结束后，关闭洗眼手推柄，以便关闭洗眼球阀开关，再把防尘盖复位到洗眼喷头上面
2	除了眼部和面部之外的其他身体部位 Body parts other than eyes and face	单独使用喷淋部分 Use shower alone	➢ Pull the shower rod by hand, quickly open the shower ball valve to 90 °, and the shower water will spray automatically 手拉喷淋拉杆，快速打开喷淋球阀到 90°，喷淋水自动喷出 ➢ after use, push the shower rod upward to close the shower switch 使用结束后，把喷淋拉杆往上推，以便关闭喷淋开关
3	眼部、面部和身体其他部位 Eyes, face and other parts of the body	同时使用洗眼和喷淋 Simultaneous use of eye wash and shower	➢ 手拉喷淋拉杆，打开喷淋部分 Pull the spray rod by hand to open the shower part ➢ 手推洗眼手推柄，打开洗眼部分 Push eye wash handle by hand, open eye wash part ➢ 使用结束之后，把喷淋拉杆往上推，以便关闭喷淋开关 After use, push the shower rod upward to close the shower switch ➢ 关闭洗眼手推柄，以便关闭洗眼球阀开关，再把防尘盖复位到洗眼喷头上面 Close the eye wash handle to close the eye wash ball valve switch, and then reset the dust cover to the eye wash nozzle

Remark 备注

打开洗眼开关或者打开喷淋开关，声光报警器进行报警 The alarm is active when using eyewash or shower,

TO SAFETY

十、 维修手册 Maintence manual

TROUBLESHOOTING 故障排除

序号	PROBLEM 故障	REPAIR CHECKLIST 维修检查清单
1	No water 没有水源	➢ Check the main shut-off valve in the Inlet 检查进水口维修阀是否打开 ➢ Check the supply has water 检查供水管里面是否有水源
2	Water leak between joint or fittings 连接处漏水	Pipe fittings, shower valve, eyewash valve is leak , disassembly it , replacement of sealing material, install again 管件，喷淋或者洗眼球阀漏水，拆卸下

		来，更换密封物质，再次安装
3	Insufficient water flow 供水量不足	Confirm that the water supply pressure is greater than 0.2MPa.确认保证供水压力大于 0.2Mpa
4	Insufficient water flow on eyewash, however, shower is sufficient 洗眼喷水不正常，而喷淋出水正常	Remove the eye wash elbow, clean the inner filter and reinstall it 拆卸洗眼弯头，清洗里面过滤器，并重新安装
5	Eyewash or face wash streams do not meet at desired eye level or are not balanced 洗眼或者洗眼/洗脸水流不交汇或者两边不平衡	Remove the eye wash elbow, clean the inner filter and reinstall it 拆卸洗眼弯头，清洗里面过滤器，并重新安装
6	Insufficient water flow at the showerhead. However. Eyewash is sufficient. 喷淋出水不足，而洗眼水充分	Remove shower head, clean plug, and install shower head again 拆卸喷淋头，清理堵塞物，再次安装喷淋头
7	Heating traced cable is not working 电伴热带不伴热	➢ Adjust the temperature control point of the thermostat 调节温控器的温控点 ➢ The thermostat is damaged. Replace it 温控器损坏，更换温控器 ➢ The Heating traced cable is damaged. Replace it 电伴热带损坏，更换电伴热带
8	声光报警器不工作	➢ The terminal is loose and retightened 接线端子松动，重新旋紧 ➢ The limit switch is damaged. Replace it 限位开关损坏，重新更换

十一、 备品备件表 Spare Parts List

Installation Parts 安装备品备件清单						
品目号 Item	备件名称 Parts Name	型号/规格 Specification	单位 Unit	数量 Q'ty	单价 Unit price	制造厂 Manufacturer
001	膨 胀 螺 栓 Expansion bolt	M12	只 Piece	4	Free	STG
002	生料带 Tape		只 Piece	1	Free	STG
备注： 安装备品备件价格含在投标总价中 The cost of installation Parts is included in the total price						

SPARE PARTS LIST for Two Years 两年备品备件清单						
品目号	备件名称	型号/规格	单位	数量	单价	总价

Item	Parts Name	Specification	Unit	Q'ty	Unit price	Total
001	喷淋球阀垫片 Shower ball valve gasket	SBVG	片 Piece	2		
002	洗眼球阀垫片 Eyewash ball valve gasket	EWBVG	片 Piece	2		
003	洗眼喷头防尘盖 Eye wash nozzle dust cover	EWNDC	只 Piece	2		
			Total:	6		

备注：

两年备品备件价格不含在投标总价中 The cost of SPARE PARTS LIST for Two Years is not included in the total price

十二、 装箱单 Packing list

序号	部件名称	规格	材料	数量（只）
1	□ 喷淋头 S1	Φ250mm	ABS	1
	□ 喷淋头 S2	Φ200mm	SS304	1
	■ 喷淋头 S3		SS304	1
2	喷淋球阀	1"	SS304	1
3	喷淋拉片		SS304	1
4	喷淋拉杆		SS304	1
5	主体（包括：骨架、电伴热带、保温层、外壳和底座等）			1
6	洗眼手推柄		SS304	1
7	□ 洗眼盆 B1	Φ250mm	ABS	1
8	■ 洗眼盆 B2	Φ292mm	SS304	1
	■ 洗眼盆 B3	Φ292mm	SS304	1
9	□ 洗眼弯头 E1		ABS	1
	■ 洗眼弯头 E2		SS304	1
10	电源接线盒		AL	1
11	温控器		AL	1
12	声光报警器 A		AL	1
13	膨胀螺栓	M12	SS304	4
14	生料带			1
15	合格证			1
16	使用说明书			1
17	□ 脚踏板（选择配置）		CS	1

T CO.,LTD

备注：

1. 包装信息：木箱包装（2 台一个包装）
2. 包装尺寸：长*宽*高=2650*1200*450mm
3. 重量：100KG

十三、 产品照片 Products Picture

STG SAFETY PRODUCT CO.,LTD

十四、 产品图纸 Products Drawing

0000-0000-MEF-DTL-0000-STG-00001-00

管口表 List of Nozzle				
序号 No.	名称 Name	尺寸 Size	标准 Standard	密封面 Facing
a	进水口Inlet	1-1/2"	ASME-B16.5-CL150#	RF
b	出水口Outlet	1-1/2"	ASME B1.20.1	FNPT

备注Notes

1. The name of unit:Heating Traced Cable Emergency Eyewash and Shower (with Alarm)
   设备名称：电伴热复合式洗眼器(A)
2. Product No.：P/N 801004ABS-S3E2B2-A
   产品编号：P/N 801004ABS-S3E2B2-A
3. The weight of unit:45KG
   设备重量：45KG
4. The size:L*W*H=1030*350*2520mm
   设备外型尺寸：长*宽*高=1030*350*2520mm
5. 位号Tag No: SS&EW-1001~
6. 数量Total: Sets

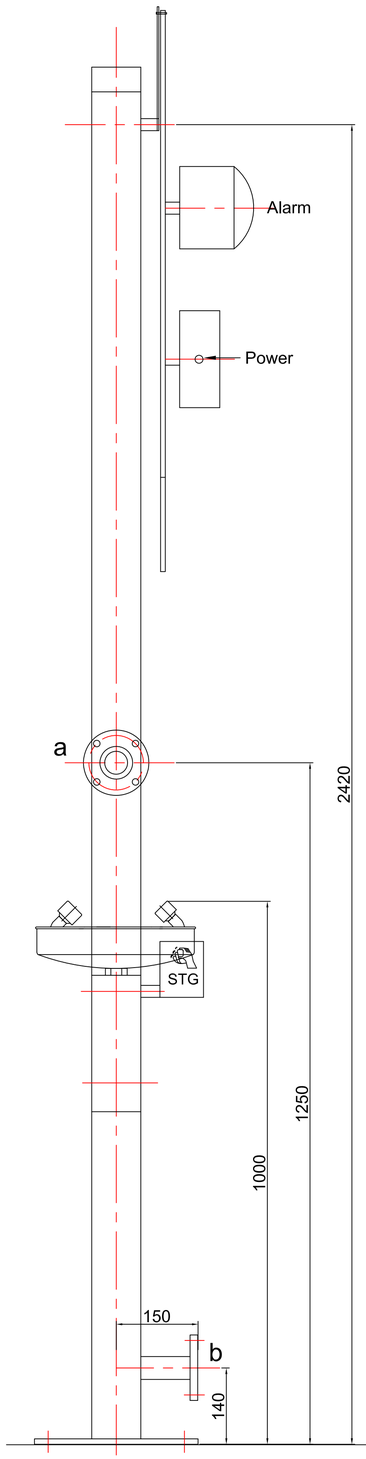

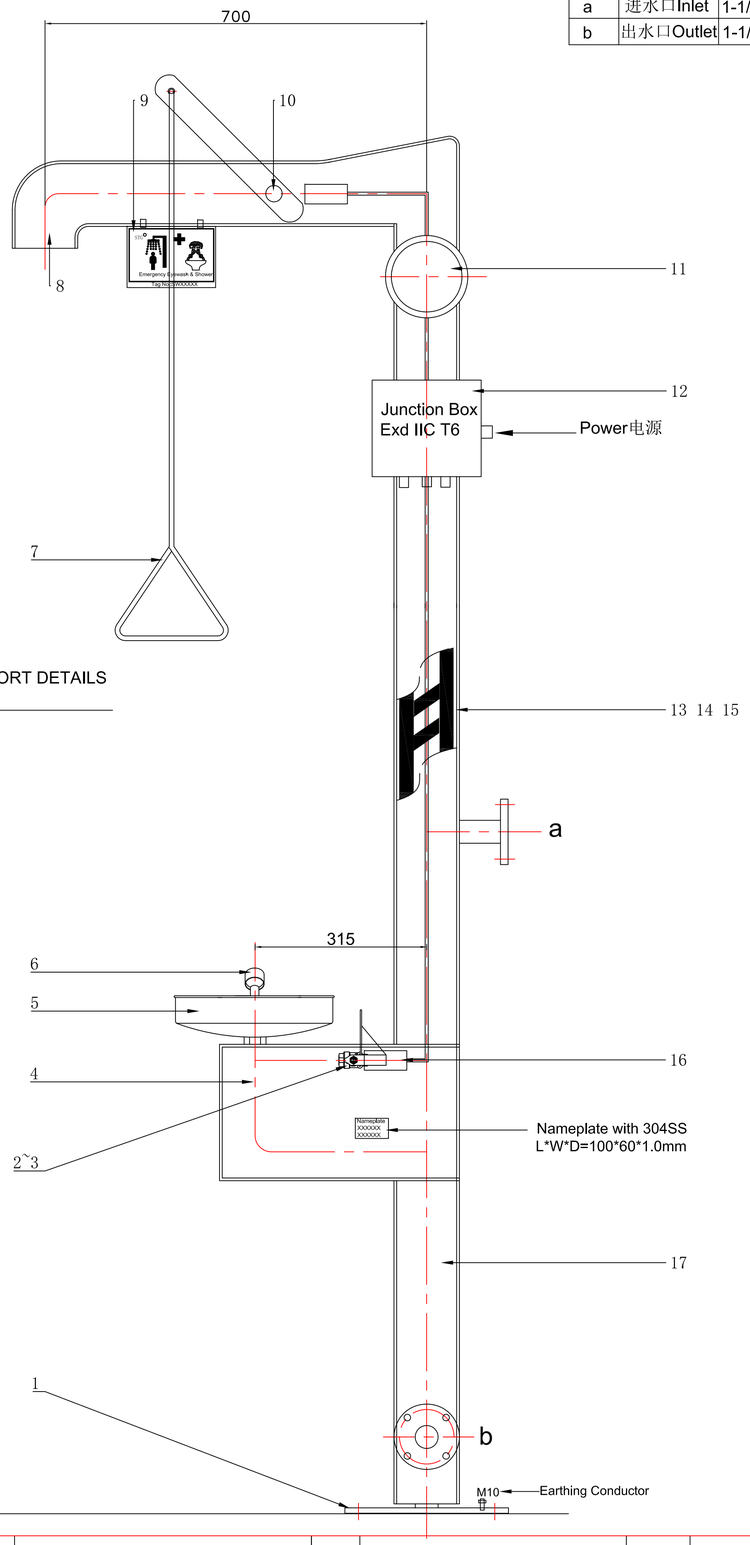

FOUNDATION LOADING DIAGRAM & SUPPORT DETAILS
基座负载图与支架详图
重量Weight:45KG

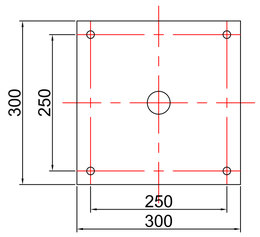

See Data: POWER AND INSTRUMENT INSTALLATION DETAILS
电气仪表安装详图
0000-0000-ELE/ICS-DTL-0000-STG-00001-00

Installation Directional Diagra安装方位图

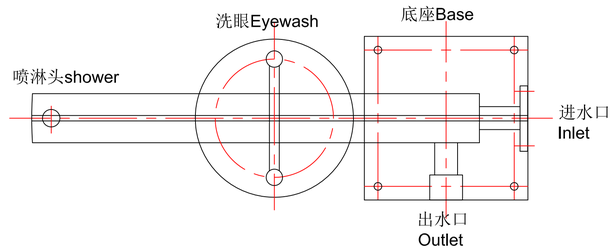

序号NO.	代码CODE	部件名称Name	规格SPEC	数量QTY.	材料MAT'L	备注REMARK
19						
18						
17	SHL	外壳Shell		1	ABS	ANTI-UV
16	CTR	限位开关Limit switch	Exd IIC T6 IP66	2	PLS	BARTEC
15	HTC	电伴热带Heat tracing cable	Exe II T6 IP66	1	200W	TYCO
14	ISU	保温层Insulation	Thickness 30mm	1	环保阻燃聚橡塑材料	
13	PIPES-P	通水管Pipe	1-1/4"	1	SS304	
12	JUNB-P	接线箱Junction Box	Exd IIC T6 IP66	1	AL	HELON
11	A	声光报警器Alarm	Exd IIC T6 IP66	1	AL	WAROM
10	SHB	喷淋球阀Shower valve	1"	1	SS304	
9	SIGNS-P	安全挂牌Security Listing	290*210mm	1	PVC	Brilliant Type
8	S3	喷淋头Shower Head		1	SS304	
7	SHR	喷淋拉杆Pull Rod		1	SS304	
6	E2	洗眼弯头Eyewash elbow		1	SS304	
5	B2	洗眼盆Eyewash bowl	Ø292	1	SS304	
4	AFD	防冻装置Anti-frozen device		1	SS304	
3	EWB	洗眼球阀Eyewash valve	1/2"	1	SS304	
2	EWP	手推柄Handle		1	SS304	
1	BASE	底座Base	300*300*10mm	1	SS304	

盐城市斯壮格安全设备有限公司
YANCHENG STG SAFETY EQUIPMENT CO.,LTD

专业 DSP	签署 SIGNED	设计 DESIGNED	
		校对 CHECKED	
		审核 REVIEWED	
		审定 APPROVED	

FABRICATION/ CONSTRUCTION DETAIL DRAWINGS
装配/结构详图

图纸编号 DRAWING NO.	图纸名称 DRAWING TITLE.	版次 REV.	描述 DESCRIPTION	日期 DATE	设计 DESIGNED	校对 CHECKED	审核 REVIEWED	审定 APPROVED
0000-0000-ELE/ICS-DTL-0000-STG-00001-00	POWER AND INSTRUMENT INSTALLATION DETAILS电气仪表安装详图	K01	Issued for Review	13-Aug-19	Mr.Tiger.Liu	Ms.Jinqi	Mr.Jack.Chen	Ms.Yeqinqin

参考图纸 REFERENCE DRAWINGS　　版次 REVISIONS

专业: DSP:　阶段: PHASE:　日期: DATE: 13-Aug-19
比例 SCALE:　图号 DWG NO. 0000-0000-MEF-DTL-0000-STG-00001-00

0000-0000-ELE/ICS-DTL-0000-STG-00001-00

Technical Description

1. Connect to power :Gland Head:M25*1.5,Material:SS304(for common cable)
2. Power:220VAC/1PH/50HZ
3. Ex-proof Grade:Exd IIC T6
4. IP66
5. The alarm is active when using eyewash or shower
6. Junction Box is HELON
7. Alarm is WAROM
8. Limit Switch (K1 and K2) are BARTEC
9. K1 is shower limit switch, K2 is eyewasher limit switch
10. Heater Traced Cable is TYCO
11. Temperature Detector is STG

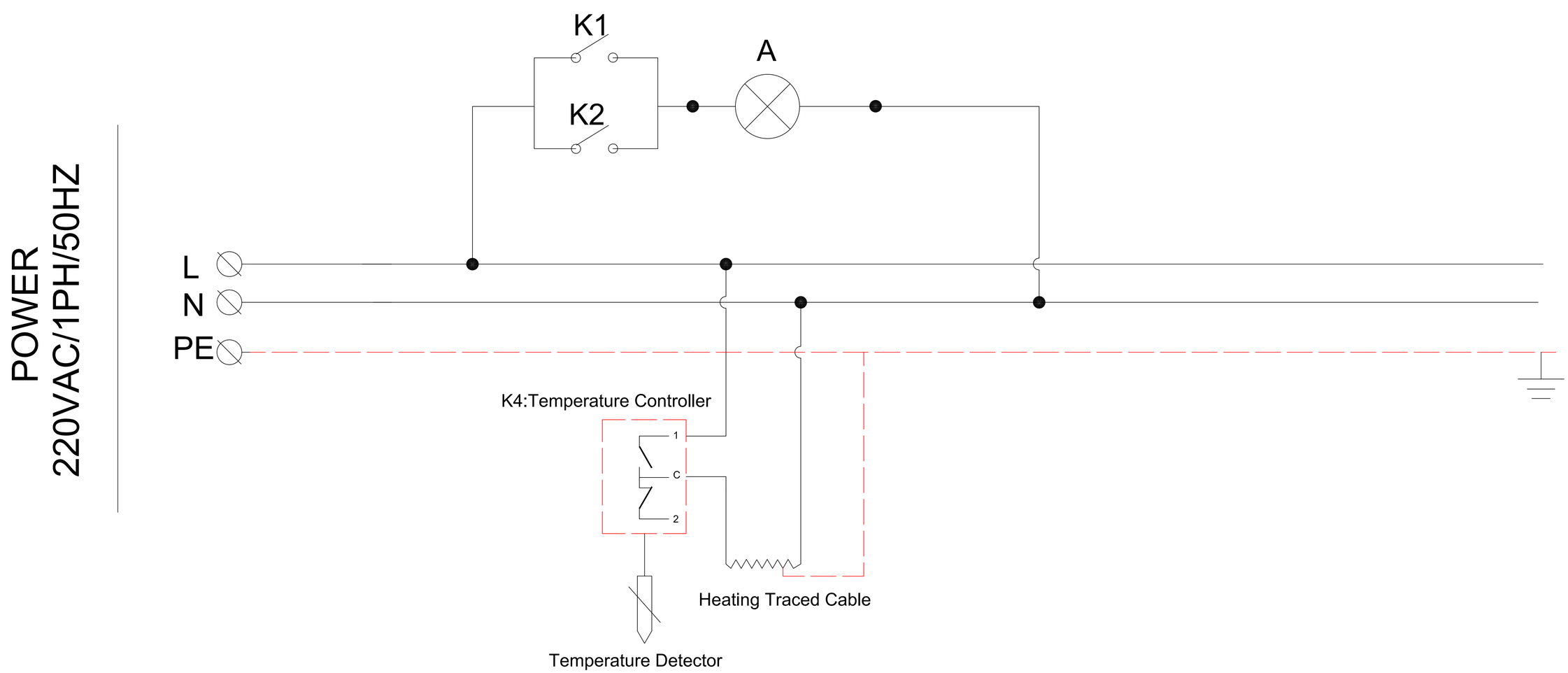

盐城市斯壮格安全设备有限公司
YANCHENG STG SAFETY EQUIPMENT CO.,LTD

专业 DSP	签署 SIGNED	
		设计 DESIGNED
		校对 CHECKED
		审核 REVIEWED
		审定 APPROVED

POWER AND INSTRUMENT INSTALLATION DETAILS
电气仪表安装详图

图纸编号 DRAWING NO.	图纸名称 DRAWING TITLE.	版次 REV.	描 述 DESCRIPTION	日 期 DATE	设计 DESIGNED	校对 CHECKED	审核 REVIEWED	审定 APPROVED
0000-0000-MEF-DTL-0000-STG-00001-00	FABRICATION/ CONSTRUCTION DETAIL DRAWINGS 装配/结构详图	K01	Issued for Review	13-Aug-19	Mr.Tiger.Liu	Ms.Jinqi	Mr.Chenyouquan	Ms.Yeqinqin

参 考 图 纸 REFERENCE DRAWINGS
版 次 REVISIONS

专业: DSP:
阶段: PHASE:
日期: DATE 13-Aug-19
比例 SCALE
图 号 DWG NO. 0000-0000-ELE/ICS-DTL-0000-STG-00001-00